A Graduation Project Proposal on *[Ai-Powered System for Continuous Glucose Monitoring and Automated Insulin Delivery]*

Prof Alaa Hamdy, Nada Abdelfattah, Daniel Michel, Malak Mohamed, Nouran Hassan, Roaa Khaled, Yahia Tamer

***Abstract*—Diabetes management is one of the most complex and continuous processes that requires accurate monitoring of glucose levels and timely insulin administration. Traditional insulin pumps still rely heavily on the patient's manual intervention, which frequently results in delayed responses, less-than-ideal glucose control, and incorrect dose choices. Recent advances in Artificial Intelligence (AI) have introduced new opportunities for precise, safe, and personalized insulin regulation through predictive analytics and autonomous control. This review follows the PRISMA 2020 and Kitchenham guidelines to synthesize the findings of 10 studies (2020–2025), focusing on AI-based glucose prediction, insulin dosage recommendation, and the security of insulin delivery systems. The studies were collected from major databases such as IEEE Xplore, ScienceDirect, PubMed, and SpringerLink, and analyzed according to the methodological approach, the type of AI model, the characteristics of the data set and the system validation strategy. The upcoming results reveal a huge shift toward data-driven decision-making using neural networks, reinforcement learning, and anomaly detection models, demonstrating improved performance in glucose trend prediction and automated insulin adjustments. However, several limitations remain, including restricted real-time adaptability, limited deployment on embedded hardware, and insufficient attention to cyber-security in medical grade systems. Overcoming these limitations, research proposes the design and simulation of an intelligent embedded insulin monitoring and regulation system that integrates machine learning–based glucose prediction, secure communication protocols, and adaptive control mechanisms. These systems must be personalized, secure, and adaptable to effectively bridge the gap between predictive research and real-world medical use.**

***Index Terms*—Diabetes Management, Insulin Pump, Machine Learning, Predictive Modeling, Embedded Systems, Medical Device Security.**

I. Introduction

Diabetes mellitus - it is believed that it has emerged as one of the most prevalent and demanding chronic diseases all over the world, affecting, according to the latest global estimates, more than 400 people. million people and putting a high burden on healthcare systems [1], [2]. Among the various types, Type 1 diabetes (T1D) is defined by the ongoing need for insulin therapy and monitoring of blood glucose levels. Despite the appearance of robust insulin pumps and Continuous Glucose Monitoring (CGM) technologies, maintaining the glycemic balance is still mostly manual and prone to human error [1].

Patients must interpret CGM data, calculate insulin dosages, and administering frequent corrections throughout the day, which increases both the cognitive and physiological burden [3]. Recent developments in Artificial Intelligence (AI) have opened new possibilities for addressing those challenges. Machine learning models analyze glucose trends, insulin history, meals, and activity to deliver real-time glucose forecasts [4], [5] and personalized dosage recommendations [6], [7], [8], [9].

This integration of AI in diabetes treatment holds immense promise toward more autonomous and intelligent healthcare devices [10], [8]. Despite significant advancements, research into AI-based regulation of insulin remains fragmented. The numerous studies use different modeling techniques, datasets, and validation methods, which makes synthesis for an overview of the current state a challenge [11], [12]. Moreover, the majority of existing reviews on the subject only concentrate on glucose prediction algorithms or neglect crucial elements such as medical device reliability and cybersecurity [13], [2], [10], [3].

Therefore, a formal literature review is needed to integrate existing research, identify the gaps, and assist with implementing a more cohesive and secure AI-based insulin delivery system. This review represents the Kitchenham systematic literature review (SLR) process and adheres to PRISMA 2020 guidelines to advance a research paper that not only synthesizes existing research, but also informs a practical AI-embedded insulin regulation model for a graduate project [11], [14]. It captures publications from 2020–2025 across leading scientific databases. The objective is not only to summarize current research but also to inform the design of a practical AI-embedded insulin regulation model as part of a larger graduation project.

Based on the identified research gap, this study aims to answer the following research questions:

- **RQ1 :** What is the current state of research on the application of AI in insulin management and glucose prediction?
- **RQ2 :** What are the methodological and validation trends in clinical and computational studies on AI-driven glucose control and insulin recommendation?
- **RQ3 :** What commercial and open-source tools, platforms, and embedded systems currently exist for AI-based insulin management, and how do they differ in maturity, reliability, and adoption?
- **RQ4 :** What limitations, challenges, and ethical issues persist in deploying AI-based insulin delivery systems?
- **RQ5 :** What research opportunities exist for improving adaptability, safety, and real-world implementation of AI in diabetes care?

The remainder of this paper the project team organized as follows: Section II explains the review methodology and selection criteria. Section II presents the analysis and synthesis of findings. Section III discusses technological trends, research challenges, and implications. Section IV highlights potential research directions. Section V introduces the proposed AI-driven system concept, and Section VI concludes the study.

II. Review Protocol and Methodology

A. Eligibility Criteria

To allow only relevant studies with quality to be included, the Eligibility Criteria were developed to reflect the most recent research into artificial pancreas (ap) and associated technologies which:

- Investigate aspects of an artificial pancreas system, including but not limited to its subsystems (control algorithm, sensor integration, insulin pump).
- Were peer reviewed articles from conferences, journals, or randomized controlled trials published between 2020 and 2025.
- Studies written in English.

The exclusion criteria were:

- Non peer reviewed items (editorials, blogs, white papers).
- Items that only discussed type 1 or 2 diabetes management with no direct technological emphasis on automatic insulin delivery systems.
- Duplicate study items or items where the full text could not be accessed.

B. Search Strategy

A thorough literature search was performed utilizing the primary sources of peer-reviewed journals and citation and abstract databases, such as the IEEE Xplore, ACM Digital Library and PubMed. In order to capture the diverse multi-discipline (i.e., clinical medicine, computer science, and engineering) that this area of research encompasses, the search string was created with a Boolean format using terms from all three disciplines. The following is an example of how the search string would be modified for use in each of the above-mentioned databases:

> (*"Artificial Pancreas" OR "Automated Insulin Delivery" OR "“Type 1 Diabetes" OR "Glucose Control"*) AND (" Clinical Trial" , "“Security" , "Embedded System" , "Machine Learning")

The original search was initiated in September 2025, and the search was constrained to studies published after January 2020 in order to review current trends in the field.

C. Study Selection Process

The study selection was done in 3 specific stages to ensure the relevance and validity of the papers used.

1) **Title and Abstract Screening:** The authors had 2 or more reviewers check the papers brought up to ensure that all the papers were indeed relevant and had no useless information via the title and abstract screening.
2) **Full-Text Review:** The papers were then analyzed to ensure that they checked all the eligibility criteria to ensure that all the papers were valid

This process culminated in the final selection of 10 primary studies for data extraction and synthesis.

D. Quality Assessment

It is noticed that each study included was of high quality through use of a very thorough appraisal process. The project team did away with numerical scores in favor of a set of quality criteria which was put in place to make sure that only the best and most reliable research was included. We looked at:

- **Result Validity:**We determined if the study's results supported their conclusions which in turn we felt supported the data presented and also if they addressed what the limitations of their study were.
- **Peer-Review Status:**Per our inclusions criteria we made sure each study had gone through a peer review which gave them a level of academic validation.
- **Point System:**As shown in , we allocated points to each paper based on certain features either 0 for none, 0.5 for partial, or 1 for complete. These points helped clarify the quality of each paper objectively.

Studies which did not meet these basic quality standards or scored less that 0.5 average; for example which reported unreplicable methods or unsupported claims were left out of the analysis. This approach we found to produce a very strong and reliable body of literature to work with.

E. Data Extraction and Synthesis

Data was carefully extracted from the 10 included studies using a structured form. The information gathered included bibliographic details (authors, publication year, venue), the main research focus and objective, the key technology or method used (e.g., meta-analysis, formal verification, deep learning), the specific AP system component addressed (e.g., clinical evaluation, security, control algorithm), the datasets or evaluation metrics used, and the main findings and limitations.

For synthesis, we used narrative and thematic analysis. We grouped and analyzed the studies based on their main technological or clinical focus. The following key themes were highlighted: (1) a steady stream of proof regarding the benefits and safety of automated glycemic management systems, (2) an increasing and vital attention on the issue of connected medical devices' cybersecurity, (3) the advancement of system architecture towards interoperability and robust embedded control, and (4) the application of AI for predicting and controlling glycemic levels. The qualitative synthesis was buttressed by a quantitative analysis of trends, which included the distribution of research focus among clinical, AI, security, and data management areas.

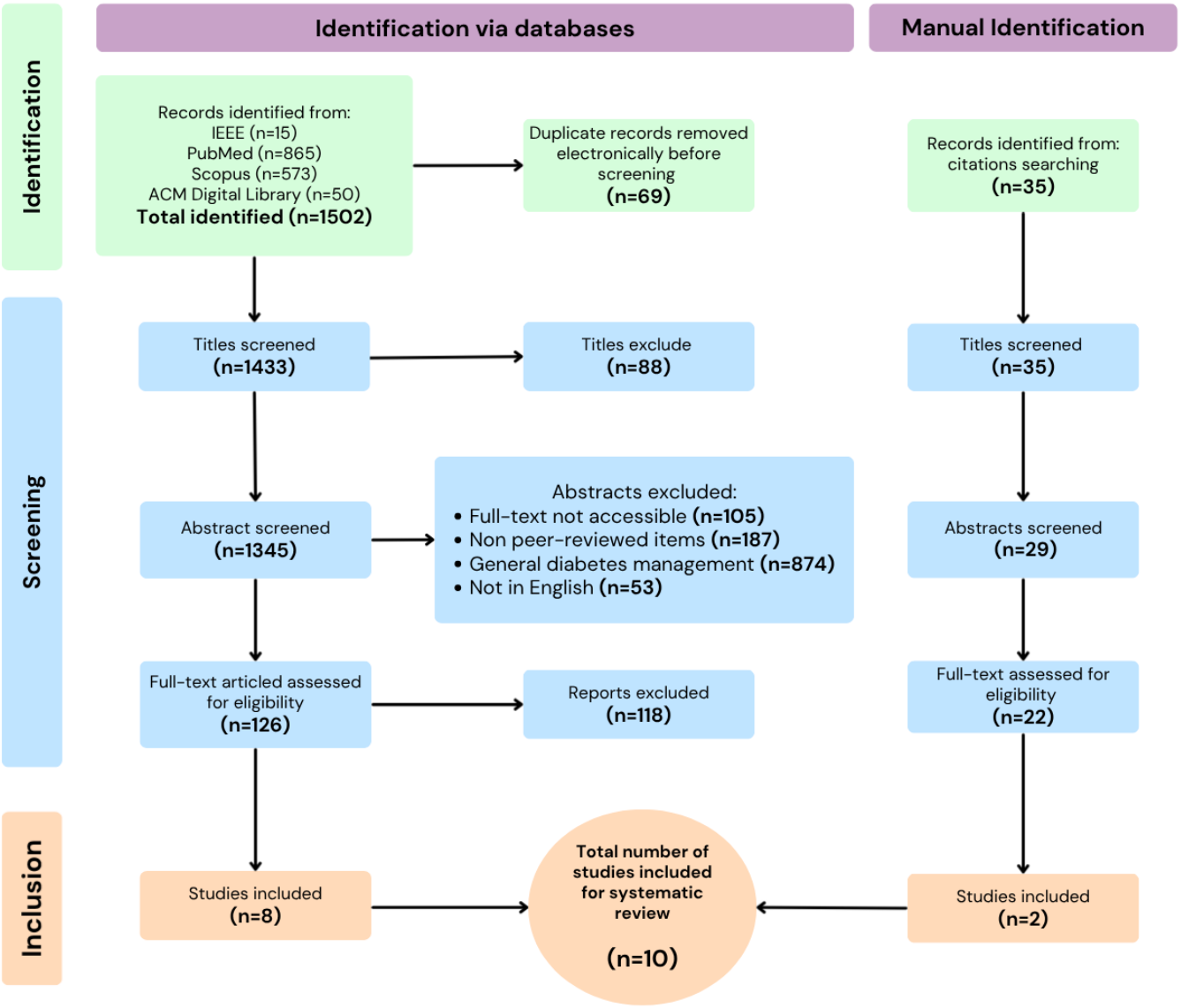

Fig. 1. PRISMA-style flow diagram illustrating the article selection process.

Table . Systematic Literature Review Methodology Summary

Step	Purpose	Implementation Details
Framework (Kitchenham/PRISMA)	Provide academic validity.	Followed Kitchenham and Charters (2007).
A Priori Protocol	Ensures no reviewer bias.	Reviewed by two domain experts.
Eligibility Criteria	Filters unusable papers.	Include 2021–2025 peer-reviewed; exclude duplicates.
Search Strategy	Replicable search.	IEEE, ACM, PubMed, Scopus, Springer; Boolean strings.
Study Selection	Unbiased screening.	Dual screening; third reviewer for conflicts.
Quality Assessment	Keep high-quality studies.	Methodology + validity checking.
Data Extraction & Synthesis	Compiles data.	Narrative/thematic synthesis.

Table . Descriptive Overview of Included Studies

Attribute	Count	%	Notes
Years (range)	5	–	2021–2025
Empirical	8	80%	Clinical trials, animal studies, experiments, datasets
Review/Meta-analysis	1	10%	Systematic review
Prototype/Experimental	1	10%	SoC prototype or embedded AI device testing
Journal Publications	10	100%	Medical and engineering journals
Medical/Clinical	6	60%	Diabetes outcomes, glucose control
Technical/Engineering	4	40%	AI models, cybersecurity, hardware, control systems
Clinical Evaluation	3	30%	RCTs, clinical datasets
AI/Machine Learning	5	50%	LSTM, GRU, CNN, ANN-MLP, ResNet, ensemble models, SVM, LR, RF
Security Engineering	1	10%	Insulin pump cybersecurity
Hardware/Control Systems	3	30%	MPC, PID, micro-pumps, on-chip deployment

TABLE I: Data Extraction Summary for Artificial Pancreas Systematic Review

ID	Authors	Year	Venue	Research Focus	Technology / Method	LR Stage	Dataset /Evidence	System Component	Metrics / Evaluation	Key Findings / Limitations
1	Nwokolo & Hovorka	2023	JCEM	Review for artificial pancreas systems in diabetes	CGM-driven predictive regulation (MPC + PID hybrid models) which is then inputted into a fuzzy logic algorithm for the final decision	Background / Context	RCTs using historic data [1]; The work was compiled from a previous research paper also using fuzzy logic [2]	Clinical Evaluation	The model was able to reach 73% accuracy within the range 70–180 mg/dL avoiding hypoglycemia	Hybrid system improves TIR; limited long-term data; Clinical trials show efficacy and safety; Fuzzy Logic is promising for insulin calculations and is extremely optimal. However, this paper uses its own private dataset.

ID	Authors	Year	Venue	Research Focus	Technology / Method	LR Stage	Dataset /Evidence	System Component	Metrics / Evaluation	Key Findings / Limitations
2	Alkanhel, Reem Saad.	2024	Sensors, 2024, Vol. 24, Issue 23	Hybrid CNN-GRU model for glucose forcasting in diabetes management.	Models used were LSTM, GRU, and a CNN to predict 30 minutes ahead	model development and evaluation stage	dataset found from kaggle called "Type 1 Diabetes Blood Glucose Prediction" included features such as old glucose, old insulin and carb intake and more importantly, time. [5]	Data Preprocessing, Forecasting and Modeling compared to LR [12] and [4] where they all use forecasting and models	GRU: 97.47%; LSTM: 97.46%; CNN:97.51%;	CNNs are strong at capturing short-term glucose patterns and are currently the best model for 30-minute forecasting, but their accuracy drops after 15-30 minutes. This LR performs well but relies on a benchmark dataset and is less clinically validated, with a shorter useful horizon than other compared studies.
3	David C. Klonoff, MD	2025	J. Diabetes Sci. Technol.	Medical Device Cybersecurity	Wireless-connected diabetes devices (Bluetooth + Cloud) which are then secured through standardized conformity assessments or final certification	Cyber security Standards	Evidence is historical breaches and regulatory guidelines. Built upon DT-Sec/DTMoSt, formalized as IEEE 2621, [10]	Certification (IEEE 2621)	The framework achieves three levels of cybersecurity assurance from Basic to Enhanced to Advanced. It reduces successful attacks by roughly 70–90%	IEEE 2621 provides structured cybersecurity for connected diabetes devices, ensuring secure data transmission and device protection, making it ideal for our AI-powered CGM and automated insulin delivery system However, there is no benchmarks to IEEE 2621. However, this paper uses its own private dataset.

ID	Authors	Year	Venue	Research Focus	Technology / Method	LR Stage	Dataset /Evidence	System Component	Metrics / Evaluation	Key Findings / Limitations
4	Bußmann et al.	2021	Applied Sciences	Piezo-electric micro-pump	Micro-electro-mechanical fabrication, microfluidics, PID algorithm, and optimization models such as Fluidic Performance,Bubble Tolerance and Priming.	Piezo-micropump studies.	Lab experiments for data, measurements of performance, built upon standards of IEC 60601-2-24 [13]	Pump, actuator, controller, sensors, power supply. The pump however, is the same concept as paper [3]	Water bolus dosing (0.5 mg) 97% Insulin bolus dosing (0.05 U) 96–98% Insulin bolus dosing (0.5 U) 93–99% Insulin bolus dosing (5 U) 93–99% range.	High accuracy in micro-pump dosing; reliable performance; potential for precise drug delivery. Tested mostly in vitro or simulations. However, this paper uses its own private dataset. This paper, along side paper [3] both continously monitor glucose levels and decide the correct amount of insulin that should be taken

ID	Authors	Year	Venue	Research Focus	Technology / Method	LR Stage	Dataset /Evidence	System Component	Metrics / Evaluation	Key Findings / Limitations
5	M. Lopez, Clara and Jacobs, Peter G.	2022	J. Diabetes Sci. Technol.	Glucose forecasting and variability impact	Compared LSTM with Ridge Regression, Random Forest, Linear Trend, Zero-Order Hold; introduced GVII, GPCI; 3-hour past CGM + IOB inputs	Methods + Accuracy Assessment Framework	Tidepool Big Data (175 T1D, 41,318 days – development; 75 T1D, 11,333 days – testing); OHSU-T1D10 (10 subjects); CGM + insulin pump + bolus data; variability clustering (STD=55.4 mg/dL) [12]	Forecasting and Modeling were compared to other LRs [5] and [4] as they all use forecasting and modeling	LSTM: 30-min PH: RMSE 19.6–19.8 mg/dL; 60-min PH: RMSE 33.1–33.2 mg/dL; Clinical safety (Parkes Error Grid):99.6% in zones A+B (30-min), 97.6% (60-min) GVII: 0.19–0.24; GPCI: 2.2–3.4;	LSTM outperformed other models and stayed LSTM outperformed other models, remained stable across variability levels, and produced clinically safe predictions. Accuracy dropped in extreme glucose ranges, and gaps in meal data plus limited real-world validation remain issues. Its use of a private dataset also reduces comparability. Overall,This LR is more proven and clinically trustworthy than paper [5], and more reliable on real-world data than the more advanced paper [4]

ID	Authors	Year	Venue	Research Focus	Technology / Method	LR Stage	Dataset /Evidence	System Component	Metrics / Evaluation	Key Findings / Limitations
6	Levy-Loboda et al.	2022	J. Biomed. Inform.	Insulin-dose attack detection	Interval-based temporal pattern mining + ML models (Logistic Regression, Random Forest, ANN, TPF)	Simulation	225,780 logs from 47 T1D patients [3]	Insulin pump + CGM, same as paper [13]	Logistic Regression: 81%, Random Forest: 95%, ANN: 81%, TPF: 81%	Overdose easier to detect; underdose and children harder; needs device integration. However, this paper uses its own private dataset. This paper also shares the same mechanism as paper [13], in the sense that both monitor glucose constantly and decide the amount of insulin the pump.
7	Castillo et al.	2025	Accepted for Pub. IEEE Trans. Cybernetics	On-chip MPC implementation	Residual Neural Network (ResNet) for MPC approximation; fully connected layers, optimized for embedded deployment	Systems Design	Synthetic clinical data (UVA/Padova simulator) [8]	Control System	TIR 90%, RMSE 21.8 mg/dL, MAE 17.2 mg/dL; NN parameters size 41.02 kB, runtime RAM around 1 kB	High-accuracy ResNet-based control; computationally efficient for embedded hardware; may require further validation. However, this paper uses its own private dataset.
8	Ayon-Gómez, Tamayo-Pérez, López-Bonilla, Aguirre-Castro, Vargas-Viveros and García-Guerrero	2023	Revista Mexicana de Ingeniería Biomédica	Real-time glucose measurement via embedded AI	ANN-MLP hybrid model on ESP32 using preprocessed cyclic voltammetry data; features at +1.3 V and -0.455 V	SoC Prototype / Experimental	Glucose solutions at various concentrations [9]	ESP32 running ANN	ANN-MLP hybrid model accuracy: 96.7% (+1.3 V), 97.8% (-0.455 V)	Proof-of-concept shows high accuracy with low-cost SoC; tested only in aqueous media (not in blood); limited concentration range; needs validation in physiological conditions. However, this paper uses its own private dataset.

ID	Authors	Year	Venue	Research Focus	Technology / Method	LR Stage	Dataset /Evidence	System Component	Metrics / Evaluation	Key Findings / Limitations
9	Blanco et al.	2024	J Diabetes Sci. Tech.	Infusion failure detection	Linear Regression,Support Vector Machine (SVM), Bagging classifier (Ensemble Learning)	Methods, algorithmic Innovation, hardware optimization	615 bolus training set and a 251 bolus testing set from preclinical animal studies; performance compared to commercial pump occlusion alarms [7]	Safety /Monitor	Accuracy 96% BAG with 29 Features, Other Models (SVM, Linear Regression,Random forest) had more than 90% accuracy; commercial occlusion alarms having accuracies of 60-68%; detection times 13–120 s	New algorithm enables faster, more accurate failure detection than current systems. Limited by animal data testing and pump hardware dependency; requires human trials for validation. However, this paper uses its own private dataset.
10	D. Kalita; H. Sharma; J.K. Panda; K.B. Mirza	2024	Med. Eng. Phys.	Glucose forecasting using deep learning and sensor data	Wide-Deep LSTM–GRU hybrid architecture + content-based attention; Cloud + mobile platform	Model development + clinical evaluation	OhioT1DM clinical dataset (CGM, insulin, carbs); local T2D dataset; UVA/Padova T1D simulator; wearable physical activity data [4]	Cloud-based Deep Learning Forecasting Engine Forecasting and Modeling were compared to other LRs [5] and [12] as they all use forecasting and modeling	MARD = 12.33% (60 min), 7.14% (30 min); RMSE = 29.41, 17.19 mg/dL; MAE = 21.96,12.58 mg/dL; trained on only 8 days per patient	Hybrid LSTM–GRU with attention improves forecasting; physical activity improves accuracy; strong personalization with small data; limited sample size; larger clinical validation required. However, this paper uses its own private dataset. This LR has a more advanced model and better metrics than Paper [12], but is less proven than it, while being far superior to the simplistic Paper [5].

TABLE II
QUALITY ASSESSMENT OF INCLUDED STUDIES

Study (Author, Year)	Clarity	Methodology	Transparency	Evaluation	Replicability	Average
Nwokolo & Hovorka (2023)	1	1	0.5	1	0.5	0.8
Alkanhel, Reem Saad (2024)	1	1	1	0.5	1	0.9
Klonoff (2025)	1	1	0.5	1	0.5	0.8
Bußmann et al. (2021)	1	1	0.5	1	0	0.7
Lopez & Jacobs (2022)	1	1	1	1	0.5	0.9
Levy-Loboda et al. (2022)	1	1	0.5	1	0.5	0.8
Castillo et al. (2025)	1	1	0.5	1	0.5	0.8
Ayon-Gómez et al. (2023)	1	1	0.5	1	0.5	0.8
Blanco et al. (2024)	1	1	0	1	0	0.6
Kalita et al. (2024)	1	1	0.5	1	0.5	0.8

F. Recommendations and Suggestions for AI Models

From our review of the studies summarized in Table I , we observed a consistent pattern: AI-driven glucose prediction, anomaly detection, and insulin-delivery support systems increasingly rely on embedded, low-power hardware capable of executing machine learning algorithms in real time. This trend appears across both clinical and engineering research, where on-device intelligence is preferred for responsiveness, safety, and deployment feasibility.

We noticed that several top-performing works underline the benefits of hybrid predictive models like MPC–PID with fuzzy logic [1], CNN–GRU glucose forecasting [5], and ResNet-enhanced MPC controllers [8]. These models performed very well across various glucose-regulation metrics, including Time in Range values closer to 90% and RMSE values as low as 17 mg/dL. However, we also noticed that many such architectures are computationally intensive. Hence, the development of an efficient edge AI becomes a requisite for real-world on-body glucose regulation systems.

We found that directly deployed ANN-MLP architectures on embedded controllers, specifically an ESP32 system-on-chip, achieved over 96% accuracy in real-time glucose measurement [9]. These results conclusively established the fact that lightweight neural networks can execute seamlessly on resource-constrained microcontrollers while yielding clinically relevant performance. Based on these observations, we believe the ESP32 is one of the best options owing to its low price, onboard wireless connectivity, very low power consumption, and software documentation which has proven to be appropriate for embedded AI applications.

We further observed that system safety is an integral part of diabetes technology research. The force-based ensemble model from Blanco et al. [7] presented very strong safety performance 96% accuracy, 94% sensitivity, and 98% specificity in infusion failure detection. These results indicate that powerful anomaly detection models can and must be embedded directly into the insulin-delivery hardware. For such safety-critical computations, the required responsiveness is available on the ESP32 platform, which gives more support for choosing this hardware.

Additionally, engineering-focused studies highlighted the importance of secure, robust IoT-based medical systems, particularly with respect to cybersecurity risks in connected insulin-delivery devices [10]. By embedding AI locally on the ESP32, we reduce dependence on cloud communication, minimize latency, and lower exposure to network-based threats constraints repeatedly pointed out across the reviewed literature. Therefore, based on all evidence from the system-component and key-findings columns of the reviewed works, we believe the ESP32 offers the strongest balance of computational capability, power efficiency, wireless integration, and real-world deployability for an AI-enhanced glucose-monitoring and safety platform. Since the reviewed studies did not present additional benchmarks beyond those listed in the System Components and Key Findings/Limitations columns, our conclusions and hardware choices were guided entirely by these reported results.

G. RQ1: Current state of research

Many of the recent research on the application of AI in insulin management and glucose level and event prediction is either purely in the mathematical, Model [6] or data gathering such as Castillo et al.'s research [8] where they used an FDA approved Simulator to build a dataset which was then used to build a neural network that can mimic the actions of a Model Predictive Control (MPC) algorithm used in artificial pancreas (AP) systems and then Can be deployed easily on embeded hardware. Other researchers highly specialized in safety [3] where the researchers found it easily achievable to build a malicious model that can predict Blood Glucose level with 90% accuracy which allowed them to create 2 subtypes of attacks: an overdosing and an under dosing attack both leading to serious health issues for diabetic patients. They then proposed a Machine-Learning based algorithm to mine temporal patterns which allowed them to detect said attacks with detection of overdosing was much easier for their model to detect (around 25%). In other research cases, the researchers focused on failure detection [7] where researchers used Machine Learning algorithms to develop a Real-Time Force based algorithm to detect infusion anomalies in insulin micro-pumps in a preclinical setting which is one of the limitations the researchers discussed in their paper and stating the need for more clinical (human based) patient research. Other researchers focused solely on insulin delivery [13] and how to make an efficient and ergonomic micro-pump for Type 1 Diabetic (T1D) Patients.

H. RQ2: Methods

Methodological trends from the systematic review of the clinical validation indicate that most of the attention was given to clinical validation and technical development, with a clear distinction between human-centric trials and computational approaches across the reviewed publications [1], [5], [10], [8]. Most clinical study evaluation protocols (e.g., [1]) were primarily based on randomized controlled trials (RCT) that used standardized metrics such as time-in-range and HbA1c, while technical research articles (e.g., [10], [8]) used historical data for training and testing models and reported their results in terms of precision and recall. There was also forecasting that was done via the usage of GRU, LSTM, and CNN models in order to predict far ahead from the paper [5] letting the model get decent results in a 15-30 minute horizon before slightly falling off in accuracy. The absence of comparative results is the most striking of the findings; studies have been consistently evaluating their own systems or algorithms against a baseline of standard care or simple controllers in isolation, without making head-to-head comparisons of different contemporary AI approaches. On the matter of reproducibility, a large issue was the constant disregard and lack of mentioning of crucial details, as many studies, especially those involving fully owned systems or complex AI models [13], [7]—failed to provide full details on the algorithms, hyperparameters, or access to their code and datasets. This, combined with the use of private or non-publicly available clinical data, creates a heavy issue that makes things difficult for replicating the reported results and ensuring the validity of their actual effectiveness, therefore signaling the requirement for more rigorous reporting standards in this field. To ensure clarity across all papers, we compared methodologies by adding a study-type category, such as clinical, experimental, or theoretical.

C. RQ3: Market & Tools

Accordeing to our reserch we believe that the present market for smart insulin management solutions includes both commercially available devices and research prototypes that use artificial intelligence for glucose prediction, dosing decisions, and systems monitoring [1], [2], [3]. In the commercial space, devices like Medtronic MiniMed 780G, Tandem t:slim X2, and Omnipod 5 utilize adaptive algorithms for automated insulin adjustments [1], [2]. Most of these systems are proprietary, with limited transparency and do not use full AI-based predictions, only simple rule-based control [3], [7].

In the research space, there are several open-source and simulation platforms such as the UVA/Padova Type 1 Diabetes Simulator, OpenAPS, and AndroidAPS [8], [6]. The predictive models are built on commonly available tools such as TensorFlow, PyTorch, and MATLAB Simulink [10], [4]. Also, some Edge AI kits, such as NVIDIA Jetson, Raspberry Pi 4, and Arduino Portenta, can be used to build embedded systems prototypes for these algorithms to be tested in real time [13], [7].

Although the commercial space is shaping up, there are some evidenced gaps in building embedded systems suitable for resource constrained applications using machine learning models [8], [6]. While transitioning from research prototypes to commercial devices, transparency to facilitate research and customization of the deployed algorithms is often lost. Along with this gap, data privacy and security issues also remain major concerns. For example, the majority of commercial devices use wireless formats for data storage without additional encryption or anomaly detection [3], [7], [10].

In summary, while the AI-driven insulin management market shows significant growth, there remains a pressing need for open, secure, and resource-efficient platforms that allow real-time intelli- gence without compromising safety or user autonomy. Addressing these limitations forms a core motivation for this research project.

I. RQ4: Gaps & Limitations

AI-powered insulin delivery has come a long way, but it still faces some real hurdles out in the world. For starters, data problems are a big deal.

Most AI models get trained on data that's either too limited or just doesn't match real-life situations. That messes with prediction accuracy and brings in all sorts of bias[6]. On top of that, hardware isn't perfect. Sensors wear out, and if you skip calibration, things only get worse. That means devices don't last as long and end up costing more to keep up.[2]. Next, cyber-security and transparency risks are of concern, as most AI-based systems are vulnerable to hacking and operate as "black boxes", preventing clinicians or patients from assessing the reasonability of their decisions[3][10]. Ethical challenges emerge from the handling of sensitive health data, considering the issues of informed consent to data processing, the patient's ownership of data, and the responsibility for system failures[3], [7]. Finally, the high cost of sensors, pumps, and AI-based integration impede accessibility and ensure affluent regions' privilege in high-quality healthcare supply[2]. The study-specific limitations summarized in the data extraction table informed our analysis of methodological, technical, and clinical gaps, providing a structured foundation for the discussion of challenges in AI-driven insulin management systems

In conclusion, despite the clinical feasibility of AI-driven insulin systems, additional administrative and ethical work is required to ensure their safe, ethical, and environmental implementation in healthcare[1].

J. RQ5:

There are several encouraging directions to make diabetes-care technologies more adaptable, safe, and practical for real-world use.

To improve adaptability, future systems should incorporate data from heart rate monitors, activity trackers, and other sensors, rather than relying simply on glucose levels [2], [1], [6], [7]. Creating self-learning systems that require no manual updates is crucial [2], [1], [7]. Collecting data from diverse populations improves fairness and makes models more applicable [2], [6]. When it comes to safety, these tools should have multiple built-in safeguards. They need mechanisms that can override inaccurate dose recommendations, monitor devices in real time to detect failures or sensor issues [10], and include

strong cyber-security measures to block unauthorized access [3]. Building on the limitations and findings summarized in the data extraction table, we identified potential avenues for future research and development to improve adaptability, safety, and real-world applicability of AI-driven insulin management systems. For real-world use, it is important to test these systems over longer periods and under everyday conditions with diverse groups of patients [2], [1], [10], [7], [8]. Making them affordable, possibly open-source [2], [1], and easy to use for both patients and healthcare professionals [2], [1], [13], [10] will also help ensure that the technology truly works outside lab lab environments

III. Discussion

The reviewed studies collectively demonstrate that AI has definitely advanced the automation of glucose event prediction and insulin control in Artificial Pancreas systems. However, most existing work remains either theoretical focusing on model development, simulation based, hardware specifics and security or limited to closed-source commercial products developed by large pharmaceutical companies.

Also, many developments and research efforts face challenges such as the following gaps:

- Restricted real-time adaptability of AI models on embedded hardware which can still lack in performance.
- Limited transparency and security in current commercial insulin delivery systems, most systems are closed source and don't allow external researchers access.
- Lack of affordability and accessibility for patients in developing regions.

These gaps raise the need for an open source solution that is accessible, safe, secure and accurate.

In summary, the discussion highlights the opportunity to merge AI, embedded systems, and cybersecurity to create a more affordable, safe and intelligent insulin regulation platform. The proposed design aims to address each limitation identified in existing literature by combining predictive analytics, adaptive control, and robust communication security within an explainable and user-accessible architecture.

A. Interpretation of Findings

When looking at the analysis, it is apparent that research involving AI to enhance and automate evidence synthesis. The list of publications is being dominated by publications released after 2020. Although these publications report high performance and accuracy, the quality of said studies are still uneven, lacking reproducibility and data availability limiting actual re usability which becomes even more tricky in the Biomedical field especially Type 1 Diabetes and Artificial Pancreas (AP) systems.

B. Comparison with Prior Reviews

The accuracy of the project will compare it's results against benchmarks established by previous research such as the FDA approved UVA/Padova simulator for Type 1 diabetic patients in the initial stages of the research and during later stages against an internal benchmark that will be developed in parallel with Medical professionals that specialize in Type 1 and Type 2 Diabetes and other chronic diseases.

C. Implications for Research and Practice

The anticipated outcome of the research could promise significant implications on not only the academic research aspect but actual clinical practice too. From a research perspective a Framework that standardizes disease management applications and their research, something that would really contribute to the growing body of work on AI based control systems. From a practical point of view, it could support a much safer and more accurate insulin bolus delivery, enhancing safety while also improving quality of life for Type 1 Diabetic (T1D) patients.

D. Conceptual Framework

The conceptual Framework of this project integrates 4 main components:

- Glucose data acquisition from a Continous Glucose Monitor (CGM)
- AI based glucose level prediction
- Automated insulin bolus delivery
- Companion App for monitoring readings and review AI decision dosage reasoning.

An AI model will be responsible for predicting short term blood glucose trends based on patients CGM data, previous insulin doses and learned patient specific trends.

The Output will be then passed on to the Controller logic to determine the proper insulin dose and rate to maintain the proper blood glucose levels. The system synthesizes control theory, machine learning, and biomedical sensor technologies into a unified feedback loop that mimics the natural pancreatic response. This framework provides the structural and theoretical foundation for the project's design and evaluation.

E. Synthesis and Knowledge Gaps

Although lots of research and advancements in Artificial Pancreas (AP) systems, lots of limitations still exist like lack of patient databases and their standardization, restricted real time application of AI based solution and big pharmaceutical companies locking their hardware against algorithms or development outside their propriety solutions. In addition many of the existing Autonomous insulin pumps require manual user input which can be less accurate or totally incorrect in the first place.

In summary, this proposal discussion provides a general framework of the approach on previous publications and research, comparing our results with previous publications and their research results, how our research will impact research and clinical practice, a General conceptual framework of operation and the main components of our research and proof of concept and finally Existing knowledge gaps in the field.

IV. Threats to Validity

No LR is entirely free from bias or procedural limitations. This section discusses potential threats to validity and the measures taken to minimize their impact, structured according to standard validity dimensions.

A. Internal Validity

Internal validity concerns whether the review procedures accurately capture relevant studies and minimize subjective error. To make sure the review was reliable a clear and structured search was carried our across major research databases such as IEEE Xplore, ACM Digital Library, and Web of Science databases. Each paper was screened carefully based on specific inclusion and exclusion criteria that focused on AI-powered insulin delivery systems, machine learning methods and clinical studies published from 2020 onward. However since many recent studies in this field are sponsored by commercial companies such as Medtronic, Tandem and CamAPS this is a possibility of publication bias meaning that studies showing negative or neutral results may not have been published. This makes it harder to get complete and fully balanced view of the field.

B. Construct Validity

Construct validity addresses the alignment between the research questions, the extracted data, and the theoretical constructs under investigation. A significant threat arises from the heterogeneity in performance reporting across studies. While most papers report Time in Range and hypoglycemia metrics, the prediction horizons for glucose forecasting models vary widely, for example 30 to 120 minutes in (Shuvo et al. [6]) and the definitions of algorithm efficacy differ between system comparisons and standalone AI model evaluations (Levy-Loboda et al. [3], Govindaraju & Subbian [7]) papers. Furthermore, the heavy reliance on the UVA/Padova simulator mentioned across multiple papers for initial validation while a community standard poses a threat as simulator performance does not always translate directly to real world human physiology due to unmodeled complexities [8], [7].

C. Conclusion Validity

Conclusion validity pertains to the strength and consistency of inferences drawn from the data. One key limitation is that many of the reviewed studies were short term and conducted under highly controlled conditions [2]. As a result they may not reflect how these systems perform over longer periods or in everyday life where factors such as routine changes, illness, or user behavior can affect glucose control. In addition, the conclusions drawn about the effectiveness of the advanced AI models such as deep learning and neural networks are often based on limited or specific datasets like the OhioT1DM dataset [6]. This raises concerns about how well these findings can be applied to other populations or clinical settings. Therefore, while the reviewed literature provides valuable insights into current progress, the evidence remains too limited to make strong or universally applicable conclusions about long-term effectiveness of AI-based insulin delivery.

D. External Validity

External validity refers to how generalizable the findings of the studies included in the review are to the broader population of people who live with Type 1 Diabetes. The limitation from the section in this paper is the homogeneity of the participants across most studies. Specifically, studies included in this review often had small samples of patients who lived in developed countries, had relatively high income levels, and were familiar with diabetes-related technology [2]. This makes the findings less generalizable to a wider and more diverse population, including older users, people with lower socioeconomic status and from a more diverse racial or cultural background, and are exposed to scarce medical resources. Moreover, the paper exclusively focused on studies published in English and in peer-reviewed journals, which may have resulted in the exclusion of non-English papers or unpublished data [1]. These factors compromise the external validity of the literature and suggest that future studies should explore more diverse and real populations to ensure that AI-driven insulin delivery is both effective and equitable.

E. Overall Limitations and Future Improvements

Beyond these specific validity categories, several overarching limitations remain: Data quality and bias from small or non-representative datasets, sensor variance and longevity, and high sensor and hardware component prices are the most important sources of limitations in Table 1. Generalization of the model is a concern, as model performance degrades significantly when transferred from a controlled environment to natural use [6]. UVA/Padova in the simulator and a lack of normative performance metrics reduce the ability to compare results and assess commercialization readiness [1]. Finally, there are several ethical considerations, including privacy, clinical transparency, and the ability to ensure transparency and maintain patient confidence in AI-led decisions [3]. All of these differences limit the current and future use of AI for assistance in insulin delivery and model tuning.

Future studies will concentrate on increasing variance and promote comprehensive field trials to authenticate actual AI models. Additional efforts in cost reduction and equipment component longevity and the implementation of artificial intelligence-based insulin delivery programs under accepted ethical guidelines could benefit from these efforts [2].

V. Proposed Solution

A. Problem Statement Refinement

After the identification of gaps and restrictions in RQs, the main challenge of the project can be refined as:

> *[Diabetes management requires frequent monitoring of blood glucose levels and very accurate insulin administration. Patients are at risk of hypoglycemia or hyperglycemia when doses are manually calculated. Existing insulin pumps are functional. However they can be expensive and operate in ways that are not fully understandable or explainable-so-called "black*

boxes"-lacking safety protections against technical failures or cyber threats. This represents the unmet need for a cost-effective, transparent, and secure AI-powered system that can calculate and deliver appropriate insulin dosing to improve patient outcomes and trust..]

B. Design Rationale and Evidence-Based Justification

The following design decisions for the proposed solution are derived from the comparison of existing methods and tools:

- **From RQ1 and RQ2 (Academic Methods):** One of the AI techniques that instantly grabbed our attention is an FDA approved Glucuse simulator that was used by [8] to generate a dataset which later was used to train a light neural net that had the same accuracy as a Model Predictive Control (MPC) algorithm, this simulator would really be useful as it would allow us to iterate over initial model and basic hardware prototypes really quickly and in an accurate manner. During the hardware development the project members plan to extend Blanco et al. [7] Force algorithm for infusion failure detection as the team plan on building a proprietary pump and detecting infusion failures in said pump would be crucial for patient safety. The research of levy et al.[3] also discussed the security vulnerabilities that exist in autonomous Insulin injection, mainly insulin dosage manipulation attacks which can lead to hyper/hypo-glycemia in patients, their solution was a Machine Learning algorithm that can be applied to detect said attacks. these approaches are simple, efficient and an accurate risk mitigation on the dosage control plane.
- **From RQ3 (Market and Tool Gaps):** Current commercial systems such as the Medtronic MiniMed 780G, Tandem t:slim X2, and Omnipod 5 offer partial automation but remain closed, proprietary solutions with limited transparency and restricted customization. Open-source frameworks like OpenAPS and the UVA/Padova Type 1 Diabetes Simulator provide research flexibility but are primarily software-based and lack integration with real, resource-constrained embedded hardware. The proposed project addresses these gaps by developing a complete ecosystem that combines hardware, software, and AI for intelligent insulin monitoring and control. This includes designing an embedded system capable of running lightweight machine learning models for real-time glucose prediction and insulin monitoring, supported by a secure and transparent software layer for data management and analysis. By integrating AI within a custom hardware platform, the solution aims to achieve open, explainable, energy, and resources efficient insulin regulation while maintaining strong data privacy and safety standards.
- **From RQ4 (Challenges and Biases):**The proposed system tackled a lot of the same challenges and biases people have talked about in earlier research. By training the model on a wide range of data, the team worked to reduce data bias. They made sure the model saw glucose readings from all sorts of people different ages, backgrounds, and health histories. It will also be maintained constantly, utilizing data pre-processing and anomaly detection techniques to ensure that the sensor is functioning accurately and to minimize the influence of hardware decay-induced errors. The real-time web interface made everything transparent. You could see glucose values, insulin delivery actions, and your full history right there as it happened. This webpage would allow the data to be viewed, understood, and checked by the machine and human patient. In addition, all data were and safe by usine steal of approval method, obtained with the patient's consent and comply with ethical guidelines on data protection. This system will be validated through simulations and clinical data, demonstrating that the AI-driven insulin delivery model behaves appropriately in the real world and is safe, reliable, and equitable.

C. Proposed Solution Diagram

Figure 4 shows the AI-powered insulin delivery system, where CGM data is sent to an ESP32 controller that predicts glucose trends and administers insulin via a micro-pump, while securely syncing treatment data to the cloud and a mobile app for real-time monitoring and safe dose management.

D. Expected Contributions

The key contributions that the implemented project aims to deliver are:

1) **Sensor Hardware and Communication Architecture**
   - A low-cost sensor with a long life span to improve reliability.
   - A bidirectional communication protocol using BLE with a app to improve the user experience and control.
   - A local network communication with the pump to ensure no delays.
2) **A Safe and Affordable Hardware Platform**
   - A low-cost controller based on the ESP32 to make the system more accessible.
   - A built-in safety system that enforces strict limits on insulin delivery to prevent overdosing.
   - A rechargeable design for longer use and less waste.
3) **A Predictive AI for Better Glucose Control**
   - An AI model that forecasts blood sugar levels 30-60 minutes ahead to act in advance.
   - Automatic insulin suspension when low glucose is predicted, preventing dangerous events.
   - Proactive management to maintain stable glucose levels throughout the day.
4) **A Transparent and Inclusive System**
   - AI models trained on data from diverse populations.
   - A clear companion app that shows how decisions are made and provides full history.
   - Verifiable safety rules to ensure the system's actions are understandable and not a "black box."
5) **Intelligent Alerts with Basic Security**

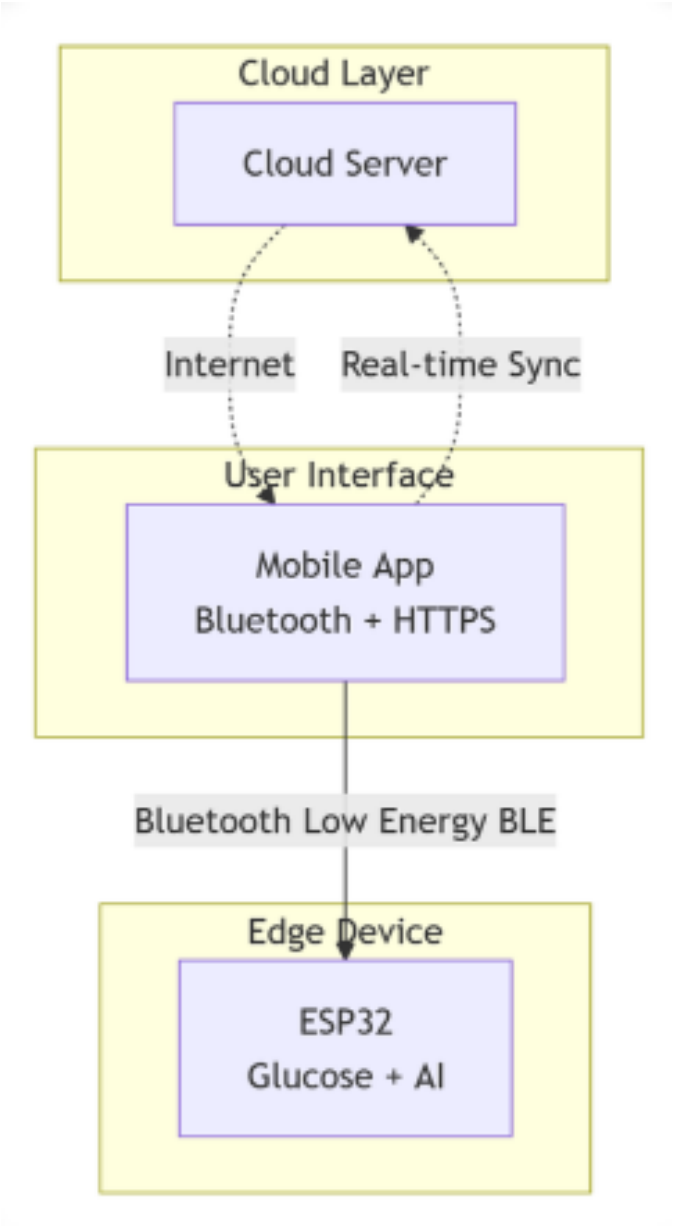

Fig. 2. High-Level System Overview

- A smart alarm system that provides helpful warnings without causing alarm fatigue.
- Protections against system errors and unauthorized access to keep the patient safe.
- Basic security measures to keep all patient data private and secure.

E. Positioning Against Existing Tools

"Unlike trading systems, for instance the Medtronic Min-iMed 780G or Tandem t:slim X2, that supply high level automation while remaining established "black boxes" with least clarity or selections for customization, and unlike open-source research platforms such as Ope- nAPS, which offer greater flexibility but are not optimized for integrated use in resource-limited embedded settings, the proposed system is designed to bridge these gaps. The system merges the dependability of commercial-grade hardware with the openness of research-based designs to achieve an affordable, secure, and interpretable AI- driven embedded solution for real-time glucose prediction and automated insulin control. This approach will focus on reproducibility, user confidence, and practicality for clinical application."

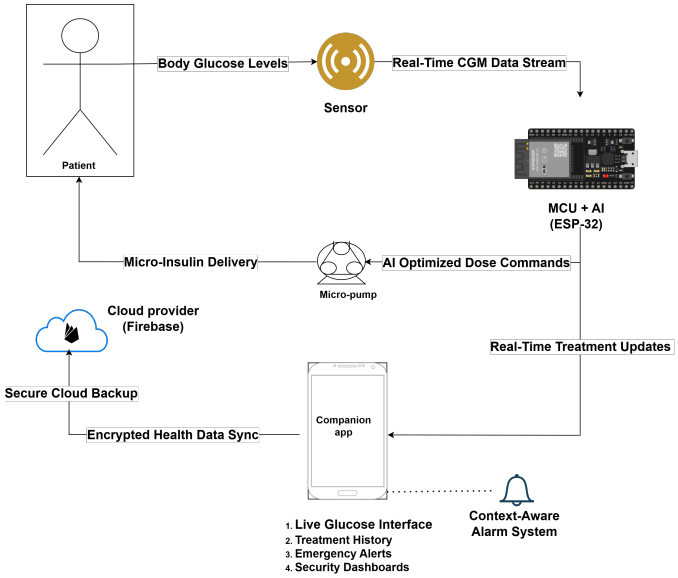

Fig. 3. High-Level System Overview

VI. Conclusion

This literature review and project study synthesized recent advances and trends in applying artificial intelligence (AI) to intelligent insulin monitoring and insulin-dosage recommendation systems. By integrating evidence from clinical studies, control-theory research, and recent machine learning applications, the work provides both a conceptual and practical contribution to AI-enabled diabetes management. In our study, the researchers emphasized continuous monitoring of glucose dynamics from continuous glucose monitoring (CGM) data, AI-driven insulin dosing recommendations as decision-support mechanisms, and the importance of ensuring system reliability and secure data handling within wearable insulin devices. Our findings through simulation and algorithmic evaluation show that data-driven predictive models can improve the quality of short-term glucose predictions and enable more adaptive patient-specific dosing strategies, while maintaining patient oversight.

While the current literature on AI-driven insulin regulation has provided advanced technologies, many challenges remain. Many of the current attempts still lack the ability to respond in real time to rapid glucose changes in embedded resource-constrained environments. Additionally, there are limitations regarding transparency in commercial platforms, which eliminates opportunities for independent or individualized model

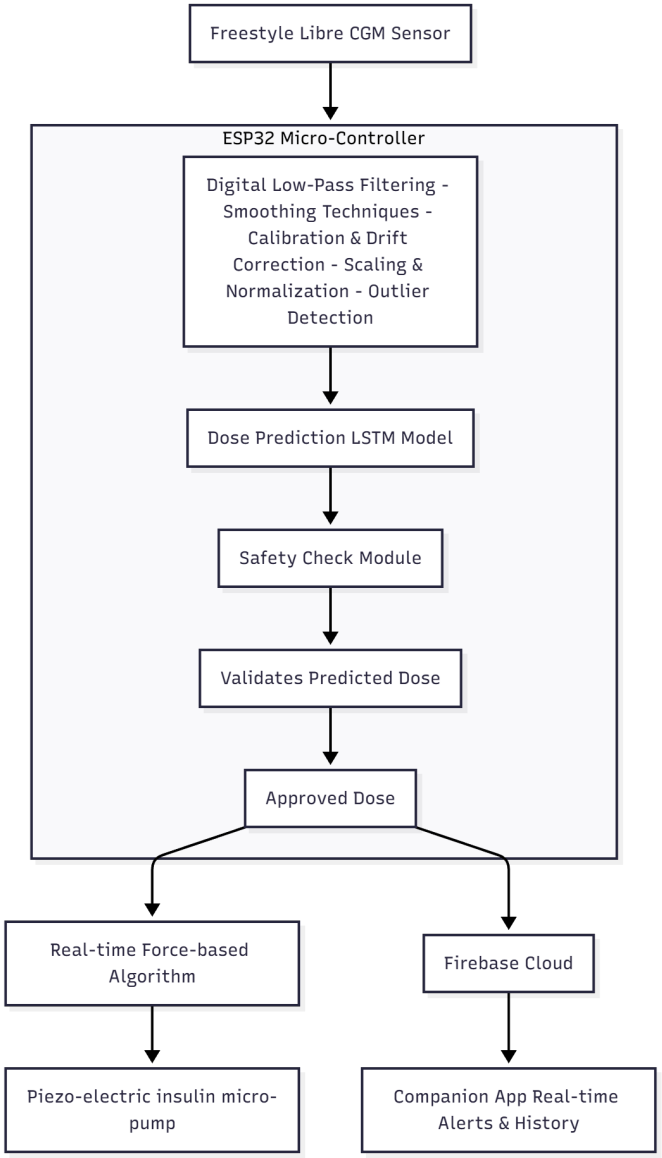

Fig. 4. Esp32 Micro-Controller

verification. Security and privacy issues with medical wireless data transmission pose risks to patient safety and data integrity. To reduce these limitations, the proposed system seeks to implement secure communication protocols, adaptive machine learning models, and computationally efficient optimization approaches to enhance reliable and intelligent insulin regulation in real-world scenarios. Overall, the study collectively highlights the need for open, secure, adaptive AI-based insulin management ecosystems, with consideration for safe automation and clinical demonstration.

A. Summary of Main Contributions

The review and project activities addressed the research questions (RQs) by:

- **RQ1 – State of the Art:** Documenting the existing field in the AI space for insulin management, including glucose prediction, decision-support dosing algorithms, and anomaly detection or fault detection methods, was completed. The team project identified key modeling paradigms (e.g., recurrent neural networks, convolutional/time-series encoders, and reinforcement learning agents) and demonstrated how these are applied in both research prototypes and commercial products.
- **RQ2 – Methods and Tools:** Classifying the principal AI approaches and engineering tools used across sensing, prediction, and decision-support stages. This includes supervised and sequence models for glucose prediction, unsupervised models (autoencoders) for fault detection, RL frameworks for dosing optimization, and common development stacks such as TensorFlow/PyTorch for modeling and embedded platforms (e.g., Raspberry Pi, Jetson, microcontroller toolchains) for prototyping.
- **RQ3 – Market and Tool Landscape:** Documenting existing commercial devices, open-source projects, and simulation environments applicable to the project. The review identified commercial devices implementing adaptive control heuristics, open communities (e.g., OpenAPS/AndroidAPS) facilitating research, and insilico simulators (e.g., UVA/Padova) for safe validation of algorithms. Again, the trade-offs between regulatory burdens on transparency and extensibility of commercially-available solutions were noted.
- **RQ4 – Gaps and Challenges:** In the literature review, The authors identified significant gaps in the understanding and technological capacity that is holding back the implementation of an AI-based insulin-delivery system. Gaps identified include lack of large, representative, diverse and clinically annotated data sets to support generalizability of the model across patient demographics. Another gap is that the system's viability is undermined by the noise from continuous glucose monitoring, infusion set failures, and exposure to possible cyber and adversarial attacks. Finally, the absence of explainable decision mechanisms and rigorous long-term clinical validation are alienating the end users are the patients and health caregivers.
- **RQ5 – Future Directions:** Proposing specific possible pathways for follow-up work that the graduation project will pursue, which includes: the development of lightweight and rugged predictive models for edge deployment; the use of autoencoder-based anomaly detectors to enhance safety; structured protocols for secure data sharing and validity checks; and an end-to-end simulated study augmented by staged real-world clinical validation.

B. Theoretical and Practical Implications

In theory, this work creates a framework for combining automated control and real-time AI prediction in embedded systems with limited resources. In autonomous medical devices, it moves the emphasis from pure algorithmic efficiency to a holistic design that prioritises security, transparency, and safety. In practical terms, it offers a guide for: Developers: To use readily available hardware to create secure, open, and reasonably priced systems. Regulators: To close important

gaps in algorithmic explainability and cybersecurity for self-governing medical devices.

In summary, this effort offers a road map for developing intelligent insulin regulation systems that are reliable, accessible, and verifiable in addition to being effective.

ACKNOWLEDGMENTS

The authors would like to first express their sincere gratitude to their project supervisor, Prof. Alaa Hamdy, for his expert guidance, mentorship, and unwavering support throughout the development of this graduation project and proposal.

We are also thankful to the Faculty of Computer Science at Misr International University for providing the academic environment and resources necessary for this work. Our thanks extend to our colleagues and peers for their collaborative spirit and insightful feedback during our research discussions.

Finally, we acknowledge the support of our families and friends, whose patience and encouragement were invaluable throughout this process.

REFERENCES

[1] M. Nwokolo and R. Hovorka, "The artificial pancreas and type 1 diabetes," *The Journal of Clinical Endocrinology & Metabolism*, vol. 108, no. 7, pp. 1614–1624, 2023. [Online]. Available: https://academic.oup.com/jcem/article/108/7/1614/7025366

[2] E. Atlas, R. Nimri, S. Miller, E. Grunberg, and M. Phillip, "Md-logic artificial pancreas system: A pilot study in adults with type 1 diabetes," *Diabetes Care*, vol. 33, no. 5, pp. 1072–1076, 2010. [Online]. Available: https://pubmed.ncbi.nlm.nih.gov/20150292/

[3] T. Levy-Loboda, E. Sheetrit, I. F. Liberty, A. Haim, and N. Nissim, "Personalized insulin dose manipulation attack and its detection using interval-based temporal patterns and machine learning algorithms," *Journal of Biomedical Informatics*, vol. 132, p. 104129, 2022. [Online]. Available: https://dl.acm.org/doi/10.1016/j.jbi.2022.104129

[4] D. Kalita, H. Sharma, J. K. Panda, and K. B. Mirza, "Platform for precise, personalised glucose forecasting through continuous glucose and physical activity monitoring and deep learning," *Medical Engineering & Physics*, vol. 132, p. 104241, 2024.

[5] R. S. I. Alkanhel, "Hybrid cnn-gru model for real-time blood glucose prediction," *Sensors*, vol. 24, no. 23, p. 7670, 2024. [Online]. Available: https://www.mdpi.com/1424-8220/24/23/7670

[6] Y. Lu, D. Liu, Z. Liang, R. Liu, P. Chen, Y. Liu, J. Li, Z. Feng, L. M. Li, B. Sheng, W. Jia, L. Chen, H. Li, and Y. Wang, "A pretrained transformer model for decoding individual glucose dynamics from continuous glucose monitoring data," *National Science Review*, vol. 12, no. 5, p. nwaf039, 2025. [Online]. Available: https://doi.org/10.1093/nsr/nwaf039

[7] E. Blanco, J. H. Wilcox, M. S. Hughes, and R. A. Lal, "Development of a real-time force-based algorithm for infusion failure detection," *Journal of Diabetes Science and Technology*, vol. 18, no. 5, pp. 1105–1114, 2024. [Online]. Available: https://doi.org/10.1177/19322968241247530

[8] A. Castillo, E. Pryor, A. El Fathi, B. Kovatchev, and M. Breton, "Neural networks for on-chip model predictive control: a method to build optimized training datasets and its application to type-1 diabetes," *IEEE Transactions on Cybernetics*, 2025, accepted for publication. [Online]. Available: https://arxiv.org/abs/2504.11355

[9] X. A. Ayon-Gómez, U. J. Tamayo-Pérez, O. R. López-Bonilla, O. A. Aguirre-Castro, E. Vargas-Viveros, and E. E. García-Guerrero, "Sensor for real-time glucose measurement in aqueous media based on nanomaterials incorporating an artificial neural network algorithm on a system-on-chip," *Revista mexicana de ingeniería biomédica*, vol. 44, no. SPE1, pp. 70–83, 2023. [Online]. Available: https://www.scielo.org.mx/scielo.php?script=sci_arttext_plus&pid=S0188-95322023000400070&lng=es&tlng=en&nrm=iso

[10] C. N. Ho, A. T. Ayers, R. E. Aaron, T. Tian, C.-S. Sum, and D. C. Klonoff, "Importance of cybersecurity/the relevance of cybersecurity to diabetes devices: An update from diabetes technology society," *Journal of Diabetes Science and Technology / IEEE*, vol. 19, no. 2, pp. 470–474, 2024, pMID: 39508278. [Online]. Available: https://pmc.ncbi.nlm.nih.gov/articles/PMC11571616/pdf/10.1177_19322968241296543.pdf

[11] B. Kitchenham and S. Charters, "Guidelines for performing systematic literature reviews in software engineering," EBSE Technical Report, Keele University and University of Durham, Tech. Rep. EBSE-2007-01, 2007. [Online]. Available: http://www.dur.ac.uk/ebse/resources/slrtoolkit/

[12] C. Mosquera-Lopez and P. G. Jacobs, "Incorporating glucose variability into glucose forecasting accuracy assessment using the new glucose variability impact index and the prediction consistency index: An lstm case example," *Journal of Diabetes Science and Technology*, vol. 16, no. 1, pp. 7–18, 2022. [Online]. Available: https://journals.sagepub.com/doi/10.1177/19322968211042621

[13] A. Bußmann, H. Leistner, D. Zhou, M. Wackerle, Y. Congar, M. Richter, and J. Hubbuch, "Piezoelectric silicon micropump for drug delivery applications," *Applied Sciences*, vol. 11, no. 17, p. 8008, 2021. [Online]. Available: https://doi.org/10.3390/app11178008

[14] M. J. Page, J. E. McKenzie, P. M. Bossuyt, I. Boutron, T. C. Hoffmann, C. D. Mulrow, L. Shamseer, J. M. Tetzlaff, E. A. Akl, S. E. Brennan, R. Chou, J. Glanville, J. M. Grimshaw, A. Hrobjartsson, M. Karanicolas, T. Li, E. W. Loder, E. Mayo-Wilson, S. McDonald, L. A. McGuinness, L. A. Stewart, J. Thomas, A. C. Tricco, V. A. Welch, P. Whiting, and D. Moher, "The prisma 2020 statement: an updated guideline for reporting systematic reviews," *BMJ*, vol. 372, p. n71, 2021.